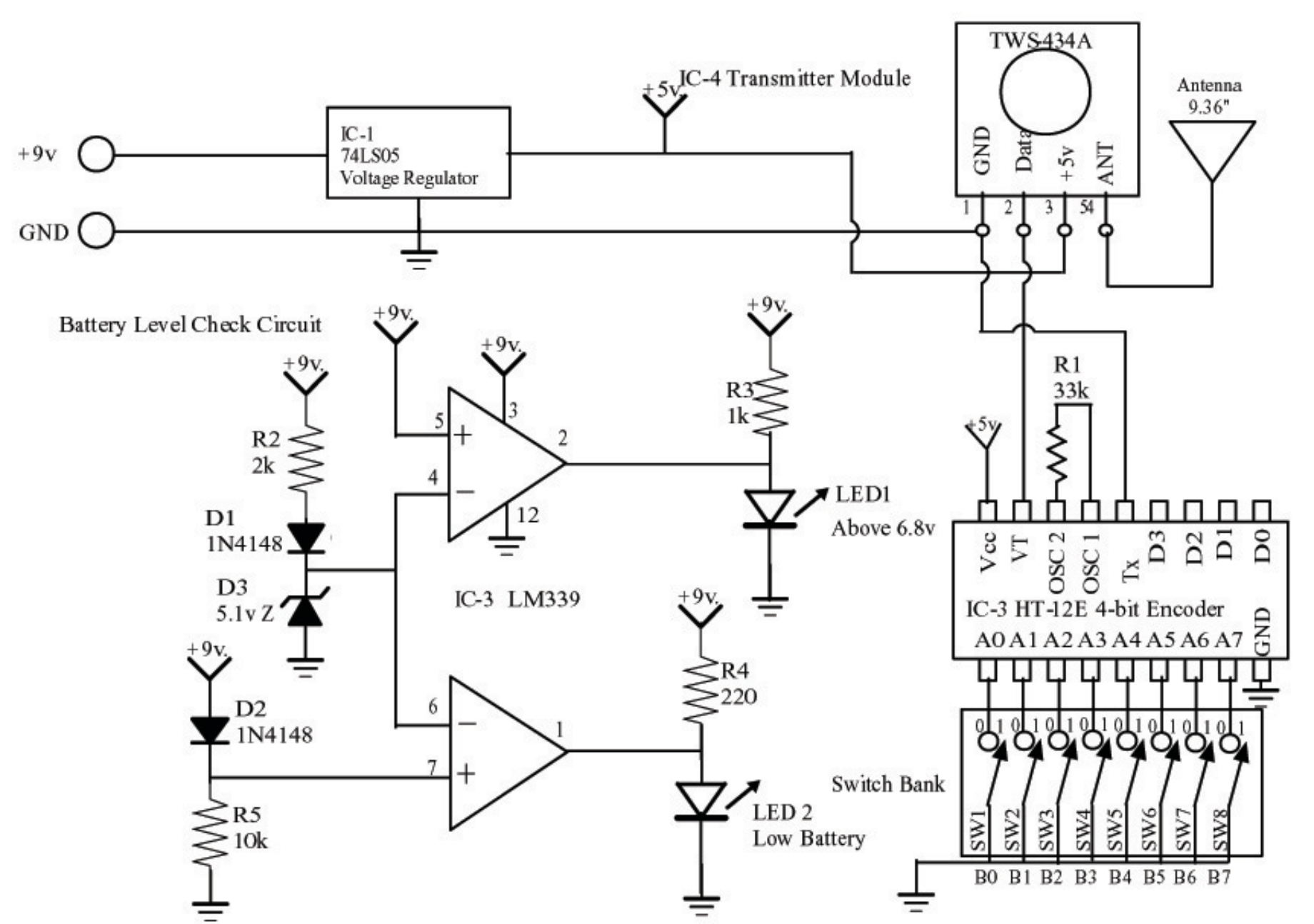
TWS434A
GND
Data
+5v
ANT
1
2
3
54
Antenna
9.36"
+5v
IC-4 Transmitter Module
+9v
GND
IC-1
74LS05
Voltage Regulator
Battery Level Check Circuit
+9v.
R2
2k
D1
1N4148
D3
5.1v Z
IC-3 LM339
R3
1k
LED1
Above 6.8v
R1
33k
+5v
Vcc
VT
OSC 2
OSC 1
Tx
D3
D2
D1
D0
IC-3 HT-12E 4-bit Encoder
A0 A1 A2 A3 A4 A5 A6 A7
GND
D2
1N4148
R5
10k
R4
220
LED 2
Low Battery
Switch Bank
SW1
SW2
SW3
SW4
SW5
SW6
SW7
SW8
B0 B1 B2 B3 B4 B5 B6 B7